Loss Solutions Group, LLC
Toll Free 866.899.8756
Fax 860.639.5158
www.LossSolutionsGroup.com

February 13, 2026

Ms. Mia Freiburg
Travelers Insurance
P.O. Box 2995
Hartford, CT 06104-2995

| | | |
|---|---|---|
| RE: | Insured: | CJ Shaughnessy Crane Svc Inc. |
| | Claim Number: | F2X8636 |
| | LSG Matter Number: | 787200.12787-00 |
| | Date of Loss: | January 9, 2026 |

Dear Ms. Freiburg,

Thank you for choosing Loss Solutions Group as your equipment loss consultant. This report provides an analysis of the above-referenced claim.

***Assignment:***

Loss Solutions Group was contacted by Ms. Mia Freiburg of Travelers Insurance. The scope of this assignment was to assess the extent of damage, repair costs, and salvage value associated with the insured's 12.5 ton Trane-manufactured packaged rooftop unit that sustained damage during a transit event on January 9, 2026.

***Findings and Analysis:***

Loss Solutions Group contacted the insured, Mr. Jamie Shaughnessy with CJ Shaughnessy Crane Svc Inc. (781-424-3371), to discuss his role in the claim. Mr. Shaughnessy explained that they hired a company to install sixteen (16) rooftop units. During the installation, a large Trane-branded 12.5-ton unit was placed back onto the upper deck of a step-deck trailer because it did not fit properly on the roof. The crew failed to notice that the upper deck still had a layer of frost on it and did not re-strap the unit after placing it there. Later, when the driver moved the truck, even with a slight incline, the unsecured unit slid off the frosted upper deck and fell to the ground, resulting in major damages. The insured presented an email stating that the manufacturer (Trane) would not warranty this unit anymore as it suffered major damages to it.

Loss Solutions Group attempted to contact the insured's HVAC manufacturer, Trane Technologies (704-655-4000), but was unable to speak with anyone regarding the proposal presented to us.



© 2022 by Loss Solutions Group, LLC. All rights reserved.

A total amount of $32,161.00 was presented.

## Scope of Damage

Loss Solutions Group submits that the insured's 12.5 ton Trane-manufactured packaged rooftop unit sustained damage during a transit event on January 9, 2026.

## Age & Condition

The affected equipment was new and unused at the time of the claimed event.

## Reparability

Loss Solutions Group has reviewed the submitted photographs and information. We believe that the proposed replacement path is justified due to the substantial damage reportedly sustained during the claimed event. The provided pictures show significant damage, indicating potential internal issues with the fan motors, compressors, refrigerant coils, and electrical components. The effort required for testing and repairs is likely to exceed the cost of replacement. Furthermore, even if repairs were made, the manufacturer would likely stand behind their voided warranty, as there could still be unknown damages remaining.

## Cost Analysis

Loss Solutions Group assessed the proposed costs by cross-referencing with alternative vendors, drawing on historical data for similar repairs, evaluating comparable equipment pricing, and consulting directly with the involved vendor to verify reasonableness.

**TRANE TECHNOLOGIES (704-655-4000) PROPOSAL # B6-273306-53492-2**

Loss Solutions Group reviewed the proposal presented by Trane Technologies totaling $32,161.00 for the replacement of the insured's rooftop unit.

Included in the cost is an amount for a 12.5 ton Trane-manufactured Precedent Unitary packaged rooftop unit and costs to ship the unit. We submit that these costs are fair and reasonable.

## RCV

Loss Solutions Group submits an amount of $32,161.00 (RCV) as being fair and reasonable to return the insured to a pre-loss condition. A further breakdown of the pricing is available in the attached spreadsheet.

## Salvage

Loss Solutions Group submits that there is little to no salvage value associated with this claimed event.



**© 2022 by Loss Solutions Group, LLC. All rights reserved.**

***Summary:***

Loss Solutions Group's findings herein are based upon all information that was available at the time of this writing. The opinions are based upon reviewed documentation, interviews, research, experience, historical references, training and education.

1. The insured, CJ Shaughnessy Crane Svc Inc., reported damage to their 12.5 ton Trane-manufactured packaged rooftop unit due to a transit event. A total amount of $32,161.00 was presented.

2. The affected equipment was new and unused at the time of the claimed event.

3. Loss Solutions Group has reviewed the submitted photographs and information. We believe that the proposed replacement path is justified due to the substantial damage reportedly sustained during the claimed event. The provided pictures show significant damage, indicating potential internal issues with the fan motors, compressors, refrigerant coils, and electrical components. The effort required for testing and repairs is likely to exceed the cost of replacement. Furthermore, even if repairs were made, the manufacturer would likely stand behind their voided warranty, as there could still be unknown damages remaining.

4. Loss Solutions Group submits an amount of $32,161.00 (RCV) as being fair and reasonable to return the insured to a pre-loss condition. A further breakdown of the pricing is available in the attached spreadsheet.

5. Loss Solutions Group submits that there is little to no salvage value associated with this claimed event.

If you have any questions or if you need any additional information, please feel free to contact Tanner Beuret at (866) 899-8756 ext. 755, or via email at tbeuret@losssolutionsgroup.com. Team Leader Nick Ramos can be reached at (866) 899-8756 ext. 724, or via email at nramos@losssolutionsgroup.com.

Best regards,

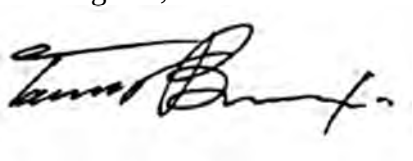

Tanner Beuret
Technical Consultant
Loss Solutions Group, LLC



**© 2022 by Loss Solutions Group, LLC. All rights reserved.**

**INSURED: CJ SHAUGHNESSY CRANE SVC INC.**
**LSG MATTER #: 787200.12787-00**
**CLAIM #: F2X8636**
**DATE OF LOSS: 1/9/2026**
**CAUSE OF LOSS: TRANSIT**

| TRANE TECHNOLOGIES (704-655-4000) PROPOSAL # B6-273306-53492-2 | | | | | | | | | | | |
|---|---|---|---|---|---|---|---|---|---|---|---|
| REF # | ITEM | CLAIM PRESENTED | | | LSG RESEARCHED RCV | | | AGE (YEARS) | USEFUL LIFE (YEARS) | CONDITION | NOTES |
| | | QTY | UNIT COST | TOTAL | QTY | UNIT COST | TOTAL | | | | |
| 1 | 12.5 TON PKGD PRECEDENT UNITARY ROOFTOP HEAT PUMP UNIT | 1 | $ 32,161.00 | $ 32,161.00 | 0 | $ - | $ - | N/A | N/A | N/A | 12.5 TON PKGD PRECEDENT UNITARY ROOFTOP HEAT PUMP UNIT. THIS PRICE WAS GIVEN IN A LUMP SUM COST. WE PERFORMED RESEARCH TO BREAK THIS COST DOWN AS FOLLOWS. |
| 2 | 12.5 TON COMMERCIAL PACKAGED HEAT PUMP UNIT (PRECEDENT SERIES) | 0 | $ - | $ - | 1 | $ 29,611.40 | $ 29,611.40 | 0 | 20 | NEW / UNUSED | 12.5 TON COMMERCIAL PACKAGED HEAT PUMP UNIT (PRECEDENT SERIES) PLUS A VENDOR MARK UP ON MATERIALS. |
| 3 | SHIPPING | 0 | $ - | $ - | 1 | $ 2,549.60 | $ 2,549.60 | N/A | N/A | N/A | SHIPPING AND HANDLING |
| **SUB-TOTAL** | | | | **$ 32,161.00** | | | **$ 32,161.00** | | | | |
| **SALES TAX** | | | | $ - | | | $ - | | | | |
| **TOTAL** | | | | **$ 32,161.00** | | | **$ 32,161.00** | | | | |

| | |
|---|---|
| **TOTAL PRESENTED** | **$ 32,161.00** |

| | |
|---|---|
| **TOTAL RESEARCHED RCV** | **$ 32,161.00** |


© 2022 by Loss Solutions Group, LLC. All rights reserved.

# Proposal

Proposal is valid for 15 days.
Customer must obtain credit approval and release order to production within 60 days of proposal date.

***PROPRIETARY AND CONFIDENTIAL PROPERTY OF Trane U.S. Inc.***
***DISTRIBUTION TO OTHER THAN THE NAMED RECIPIENT IS PROHIBITED***

***Prepared For:*** Limbach Company

***Date:*** January 12, 2026

***Job Name:***
Limbach-Whittier, Westborough RTU 12

***Proposal Number:*** B6-273306-53492-2
***Opportunity ID:*** 8532628

***Delivery Terms:***
Freight Allowed and Prepaid - F.O.B. Factory

***Payment Terms:*** Net 30 Days

---

Trane U.S. Inc. is pleased to provide the following proposal for your review and approval.

**Tag Data - 3 - 25 Ton Precedent Unitary Rooftop (Qty: 1)**

| Item | Tag(s) | Qty | Description | Model Number |
|---|---|---|---|---|
| A1 | 50HCD14 RT12 | 1 | 12.5 Ton PKGD Precedent Unitary Roofto | WHK150A4S00**G0A0A1B100C |

**Product Data - 3 - 25 Ton Precedent Unitary Rooftop**
**Item: A1 Qty: 1 Tag(s): 50HCD14 RT12**

Heat Pump
High Efficiency
R-454B Refrigerant
12.5 Ton
460/60/3
Symbio 700 unit controls
0-100% Economizer, comparative enthalpy control
Multi-speed motor
Hinged access panels
Through-the-base electric connections
Non-fused disconnect switch
Powered 15A convenience outlet
Advanced Controller with BACnet communications interface
Return and Supply air smoke detector
3-year parts, coils & controls warranty
5-year compressor parts only warranty
Year 1 Labor whole unit

1. Selections are as shown above only, start up and installation are not provided by Trane.
2. Contractor to confirm existing curb dimensions, adapter cut sheets will be provided at P.O..
3. No disconnects, thermostats, smoke detectors, interface to building automation system or roof curb.
4. Labor warranty 1st year for factory defects only is available upon request.

***Contractor to verify the offered unit meets the project requirements (capacity, dimensions and weight, electrical service, controls, options, code compliance, etc.). The following features may be required to comply with State-mandated energy codes, depending on unit size and control strategy: Low leak economizers, economizer fault detection, multi speed supply fans, and multi-stage cooling. The contractor is responsible for verifying which features are required on a project-by-project basis. Pricing for upgrades is available upon request.*

Subtotal Net Price *(excluding sales tax and tariff surcharges)* ..... $32,161.00
Lead time 3-4 weeks



© 2026 Trane Technologies. All Rights Reserved.
Confidential and Proprietary Information of Trane U.S. Inc.

***To move forward with order please fill out and return the acceptance page below.***

Carolann Hynes
LCU Sales Specialist
Trane Technologies
ezquotehvac@trane.com

***This Proposal is subject to your acceptance of the attached Trane terms and conditions***

***ACCEPTANCE***

********Everything on referenced proposal is correct unless noted otherwise**********
**All WSHP's are Non**-Returnable

On behalf of Company Name _____

Company Address _____

_____

I hereby accept this proposal in the amount of _$_____

Tax Exempt: Y / N (circle one.) If yes, please forward tax docs

Proposal Number _____ Job name on proposal _____

Dated _____

Name:_____

Signature:_____ Date:_____

Customer Purchase Order Number: _____ Credit Card? YES NO
(Circle one)

Pickup or Delivery? (circle one)

Shipping Address _____
_____
_____

Date Needed _____

Trucker to Contact _____at _____to arrange delivery

Please confirm voltage and Phase------ 115/120V 1P-------208/230V 1P-----208/230V 3P------460V 3P (circle one)

Any special delivery request? Is lift gate or open truck required for you to remove from truck? (circle one if needed)
(Lift gate and open truck may delay pick up from trucker due to availability)

Please note if any accessories or add prices are included


© 2026 Trane Technologies. All Rights Reserved.
Confidential and Proprietary Information of Trane U.S. Inc.

**Product Report - 3 - 25 Ton Precedent Unitary Rooftop**
**Item: A1 Qty: 1 Tag(s): 50HCD14 RT12**

# Trane Precedent Packaged Rooftop

## Unit Overview - WHK150A4S00**G0A0A1B100C0000000000000000

| Application | Unit Size | Supply Fan | | External Dimensions (in.) | | | Operating Weight | Elevation |
|---|---|---|---|---|---|---|---|---|
| | | Airflow | Total Static Pressure | Height | Width | Length | | |
| Heat Pump / Electric Heat | 12.5 Ton - High Eff, HP or eFlex | 5000 cfm | 0.651 in H2O | 4.92 ft | 7.25 ft | 10.25 ft | 2141.0 lb | 0.00 ft |

## Unit Features

| | |
|---|---|
| Unit Efficiency | High Efficiency |
| Refrigerant | R-454B Refrigerant |
| EER @ AHRI | 12.10 |
| IEER @ AHRI | 16.80 |
| Hinged Service Access/Filters | Hinged Access Panels |
| Through the Base Provisions | Electric |
| Disconnect / Circuit Breaker | Non-Fused Disconnect Switch |
| Convenience Outlet | Powered 15A Convenience Outlet |
| Fresh Air Selection | Economizer, Comparative Enthalpy |

## Unit Electrical

| | |
|---|---|
| Voltage | 460/60/3 |
| MCA | 40.00 A |
| MOP | 50.00 A |
| Condenser Fan FLA | 2.50 A |
| Evaporator Fan FLA | 4.60 A |
| Compressor 1 RLA | 14.40 A |
| Compressor 2 RLA | 7.00 A |
| Compressor Power | 10.31 kW |
| System Power | 12.54 kW |

## Controls

| | |
|---|---|
| Unit Controls | Symbio 700 |
| Communications Option | Advanced Controls and BACnet BAS |
| SupplyFan/Drive/MotorType | Multi-speed Motor |
| Smoke Detector | Return and Supply Air |

## Cooling Section

| | |
|---|---|
| Indoor Coil Face Area | 25.83 sq ft |
| Indoor Coil Face Velocity | 194 ft/min |
| Indoor Coil Fins per Inch | 16 |
| Indoor Coil Rows | 4 |
| Entering Dry Bulb | 80.00 F |
| Entering Wet Bulb | 67.00 F |
| Ambient Temp | 95.00 F |
| Leaving Coil Dry Bulb | 57.38 F |
| Leaving Coil Wet Bulb | 56.52 F |
| Leaving Unit Dry Bulb | 59.06 F |
| Leaving Unit Wet Bulb | 57.30 F |
| Saturated Discharge Temperature | 118.78 F |
| Saturated Suction Temperature | 50.67 F |

| Capacity | |
|---|---|
| Gross Total | 152.62 MBh |
| Gross Latent | 36.75 MBh |
| Gross Sensible | 115.87 MBh |
| Net Total | 149.65 MBh |
| Net Sensible | 112.90 MBh |
| Net Sensible Heat Ratio | 75.00 % |
| Fan Motor Heat | 1.32 MBh |
| Refrig Charge-Circuit 1 | 31.5 lb |

## Heating Section

| Heat Pump | |
|---|---|
| Heat pump Heating Capacity | 89.48 MBh |
| Heat pump EAT | 40.00 F |
| Heat pump LAT | 59.26 F |
| Heat pump heating ambient temperature | 20.00 F |
| Heat pump heating temperature rise | 19.26 F |
| Heat pump heating ambient relative humid | 10.00 % |
| AHRI COP @ 47 F | 3.60 |
| AHRI COP @ 17 F | 2.26 |


© 2026 Trane Technologies. All Rights Reserved.
Confidential and Proprietary Information of Trane U.S. Inc.

**Product Report - 3 - 25 Ton Precedent Unitary Rooftop**
**Item: A1 Qty: 1 Tag(s): 50HCD14 RT12**

## Fan Section

| Indoor Fan Data | |
|---|---|
| Airflow Application | Downflow |
| Design ESP | 0.500 in H2O |
| Component SP | 0.151 in H2O |
| Heat SP | 0.000 in H2O |
| Total SP | 0.651 in H2O |
| Indoor Fan Drive Type | Variable Direct |
| Indoor Fan Quantity | 2 |
| Indoor Fan Type | BC Plenum |

| Indoor Fan Performance | |
|---|---|
| Airflow | 5000 cfm |
| Supply Motor Horsepower | 2.900 hp |
| Total Supply Motor Operating Power | 1.050 hp |
| Indoor RPM | 929 rpm |
| **Outdoor Fan Data** | |
| Outdoor Fan Drive Type | Direct |
| Outdoor Fan Quantity | 2 |
| Outdoor Fan Type | Propeller |
| **Filters** | |
| 1st Filter Size and Qty | 8 - 20 x 24 x 2 |

## Acoustics

| Sound Path | 63 Hz | 125 Hz | 250 Hz | 500 Hz | 1 kHz | 2 kHz | 4 kHz | 8 kHz |
|---|---|---|---|---|---|---|---|---|
| Ducted Discharge | 80 dB | 77 dB | 70 dB | 65 dB | 59 dB | 56 dB | 54 dB | 51 dB |
| Ducted Inlet | 80 dB | 71 dB | 65 dB | 59 dB | 54 dB | 51 dB | 51 dB | 47 dB |
| Outdoor Noise | 88 dB | 87 dB | 91 dB | 89 dB | 86 dB | 82 dB | 79 dB | 73 dB |

Note:Ducted Discharge/Ducted Inlet prediction data conform to AHRI 260

## Warranty

| | |
|---|---|
| Labor (first year) | 1st Yr Labor Whole Unit |


© 2026 Trane Technologies. All Rights Reserved.
Confidential and Proprietary Information of Trane U.S. Inc.

## Dimensional Drawings - 3 - 25 Ton Precedent Unitary Rooftop
## Item: A1 Qty: 1 Tag(s): 50HCD14 RT12

NOTES:
1. THRU -THE -BASE ELECTRICAL IS NOT STANDARD ON ALL UNITS.
2. VERIFY WEIGHTS, CONNECTIONS, AND ALL DIMENSIONS WITH INSTALLER DOCUMENTS BEFORE INSTALLATION

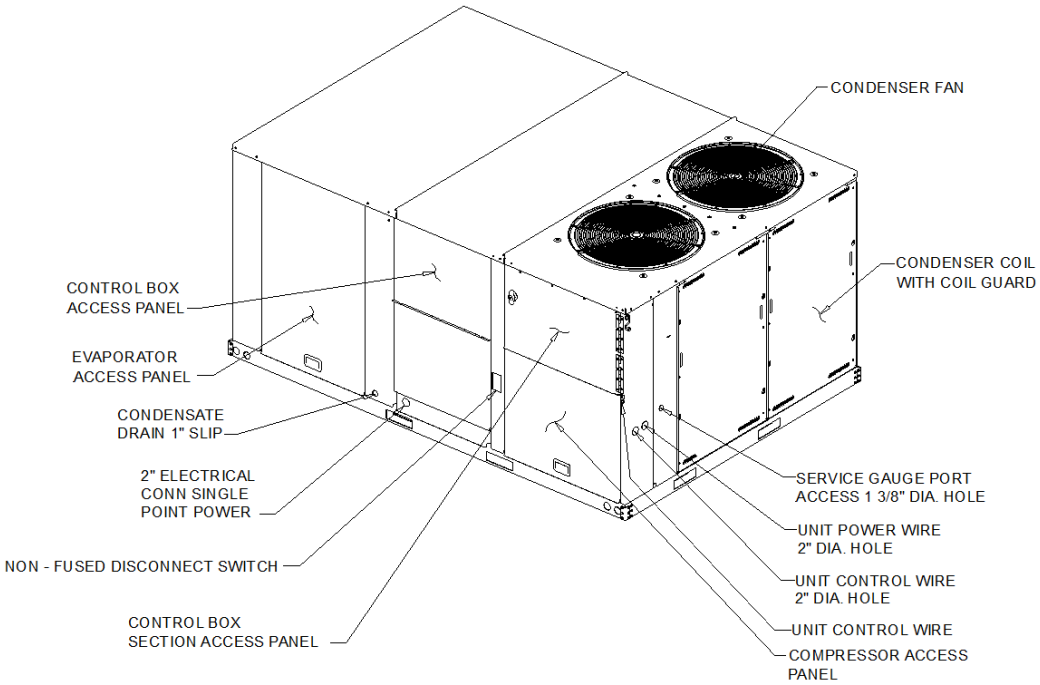


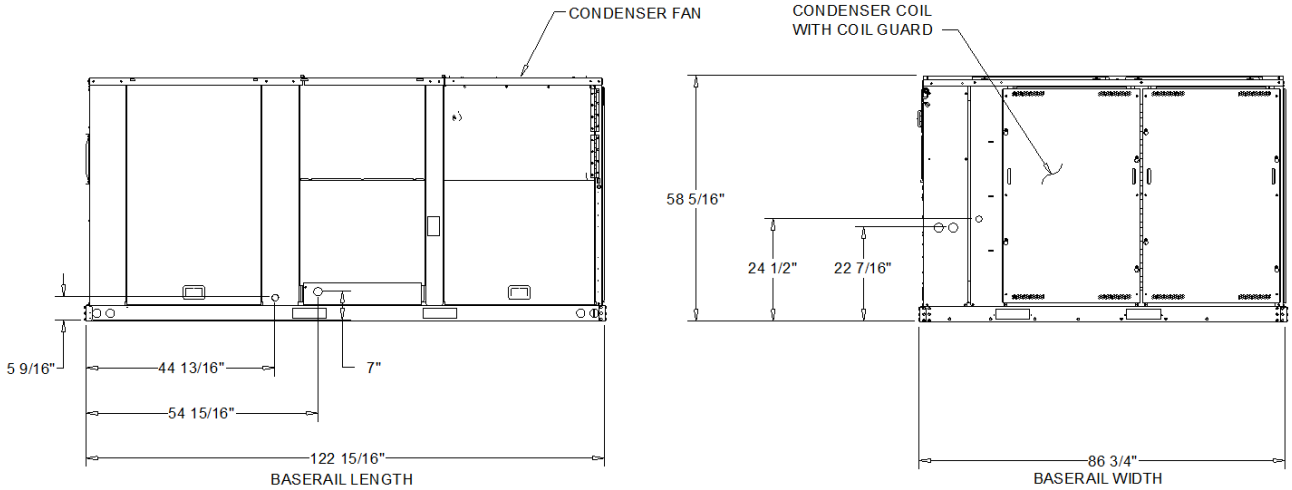


HEAT PUMP / ELECTRIC HEAT HIGH EFFICIENCY

DIMENSION DRAWING


© 2026 Trane Technologies. All Rights Reserved.
Confidential and Proprietary Information of Trane U.S. Inc.

**Dimensional Drawings - 3 - 25 Ton Precedent Unitary Rooftop**
**Item: A1 Qty: 1 Tag(s): 50HCD14 RT12**

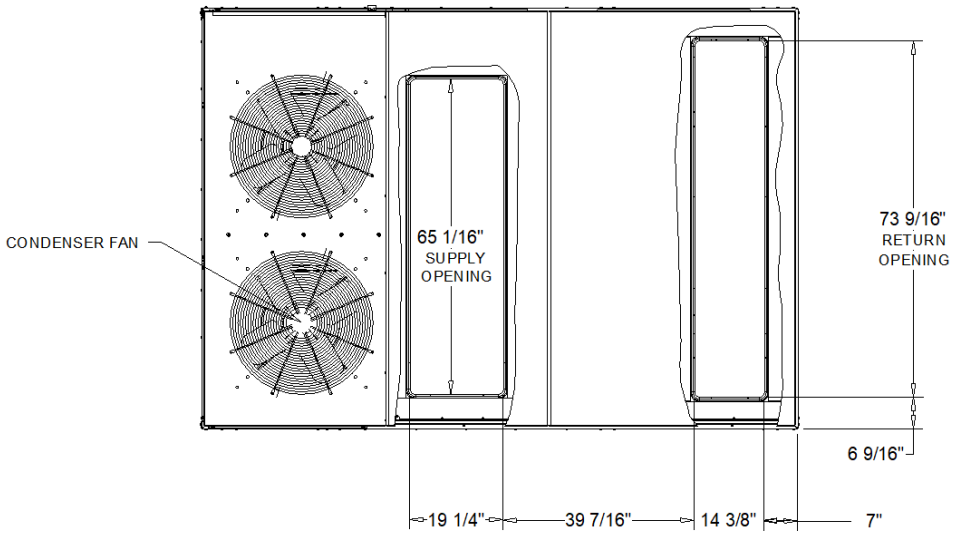


PLAN VIEW OF DOWNFLOW OPENINGS

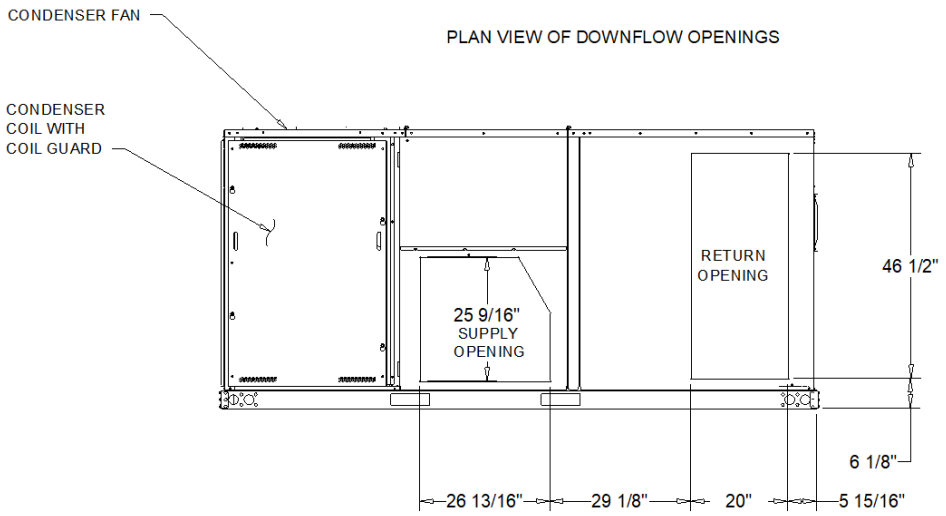


HORIZONTAL AIR FLOW OPENING

HEAT PUMP / ELECTRIC HEAT HIGH EFFICIENCY

DIMENSION DRAWING


© 2026 Trane Technologies. All Rights Reserved.
Confidential and Proprietary Information of Trane U.S. Inc.

## Weight, Clearance & Rigging - 3 - 25 Ton Precedent Unitary Rooftop
## Item: A1 Qty: 1 Tag(s): 50HCD14 RT12

NOTES:
1. APPROX. INSTALLED WEIGHT INCLUDES ALL SELECTED OPTIONS AND ACCESSORIES.
2. CORNER WEIGHTS ARE FOR BASE UNIT ONLY AND DO NOT INCLUDE OPTIONS OR ACCESSORIES.
3. WEIGHT INCLUDES BOTH FACTORY AND FIELD INSTALLED ACCESSORY.

Approximate Installed Weight: 2,141.0 lb

| | |
|---|---|
| (A) Corner Weight: 688.0 lb | (C) Corner Weight: 344.0 lb |
| (B) Corner Weight: 487.0 lb | (D) Corner Weight: 486.0 lb |

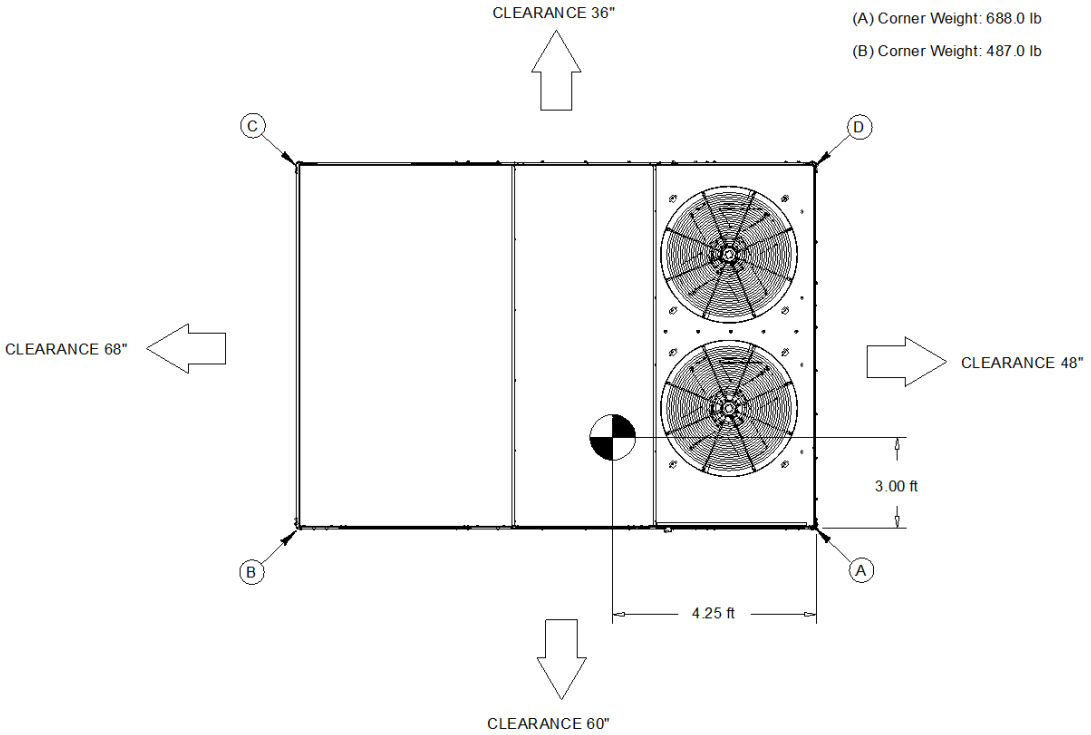


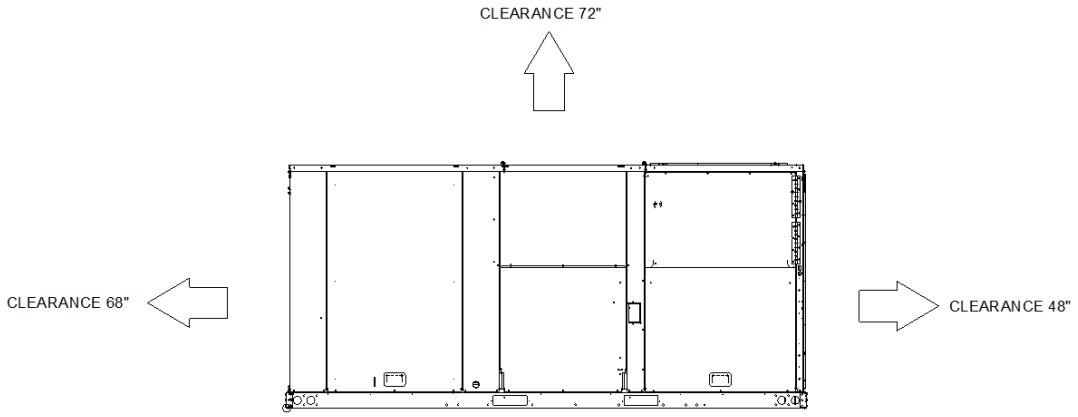


HEAT PUMP / ELECTRIC HEAT HIGH EFFICIENCY

WEIGHTS AND CLEARANCES


© 2026 Trane Technologies. All Rights Reserved.
Confidential and Proprietary Information of Trane U.S. Inc.

**Accessory - 3 - 25 Ton Precedent Unitary Rooftop**
**Item: A1 Qty: 1 Tag(s): 50HCD14 RT12**

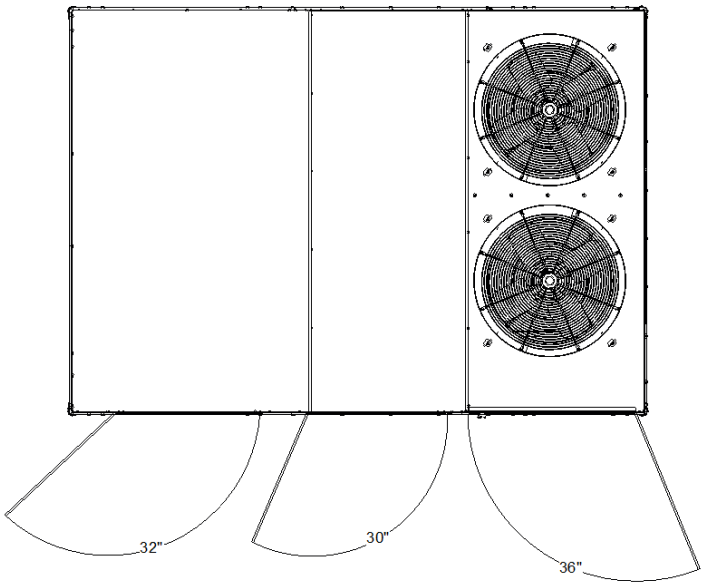


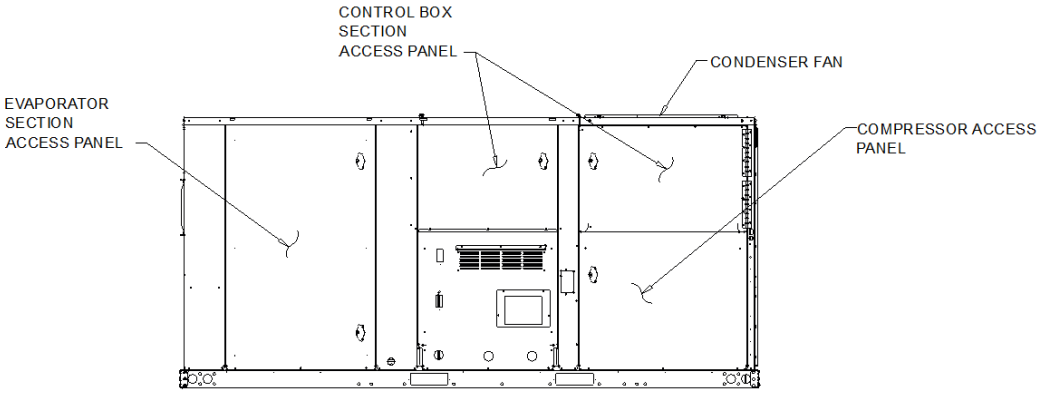


SWING DIAMETER FOR HINGED DOOR(S) (OPTION)

HEAT PUMP / ELECTRIC HEAT HIGH EFFICIENCY


© 2026 Trane Technologies. All Rights Reserved.
Confidential and Proprietary Information of Trane U.S. Inc.

**Accessory - 3 - 25 Ton Precedent Unitary Rooftop**
**Item: A1 Qty: 1 Tag(s): 50HCD14 RT12**

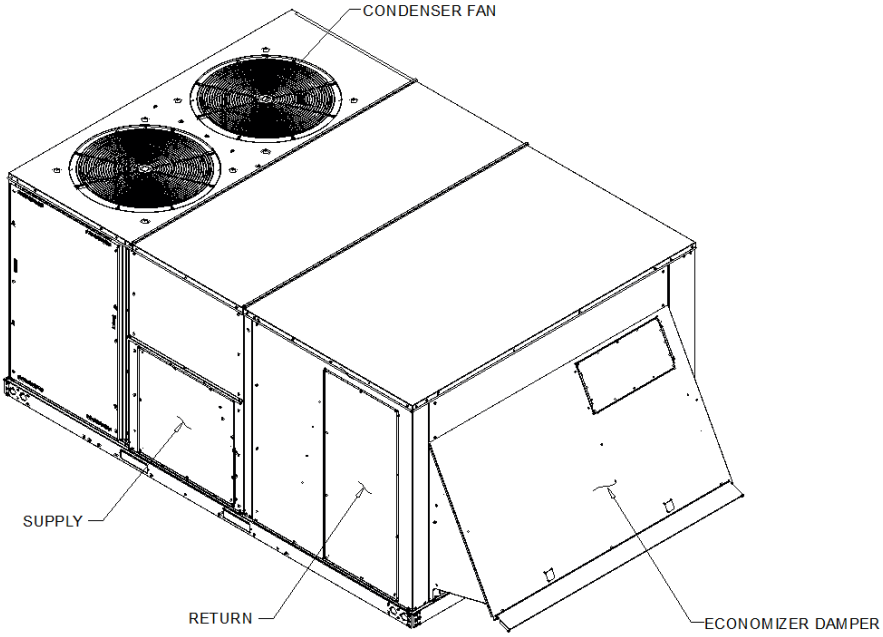


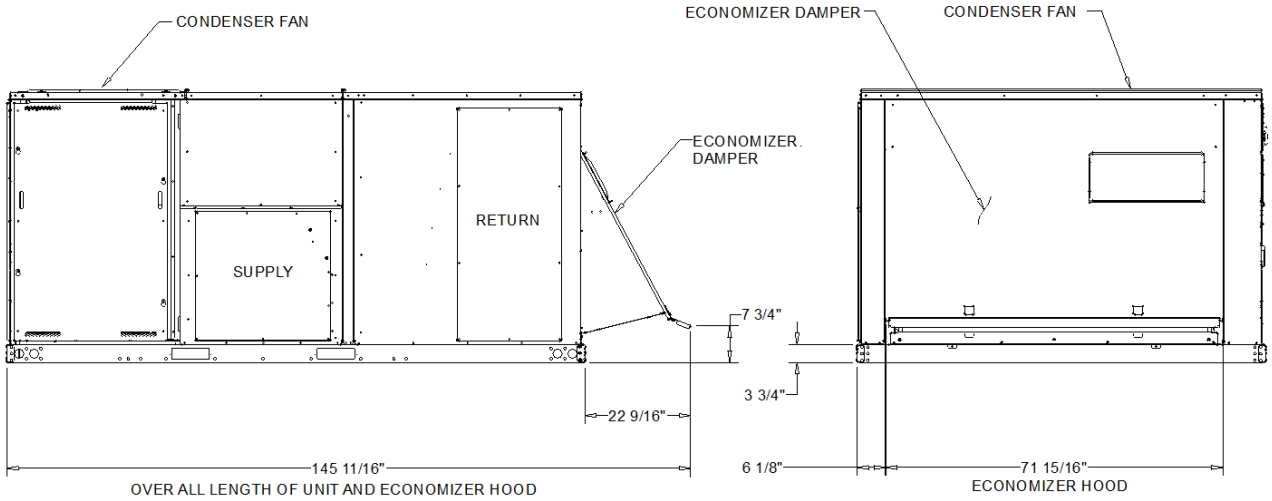


ECONOMIZER AIR DAMPER(S) (OPTION)

HEAT PUMP / ELECTRIC HEAT HIGH EFFICIENCY


© 2026 Trane Technologies. All Rights Reserved.
Confidential and Proprietary Information of Trane U.S. Inc.

**Accessory - 3 - 25 Ton Precedent Unitary Rooftop**
**Item: A1 Qty: 1 Tag(s): 50HCD14 RT12**

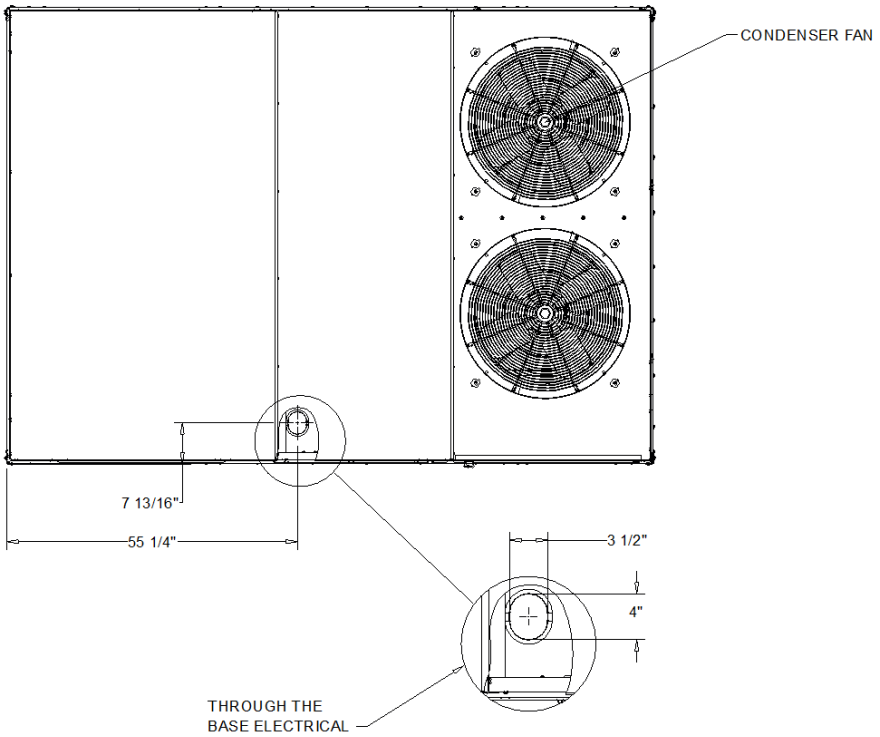


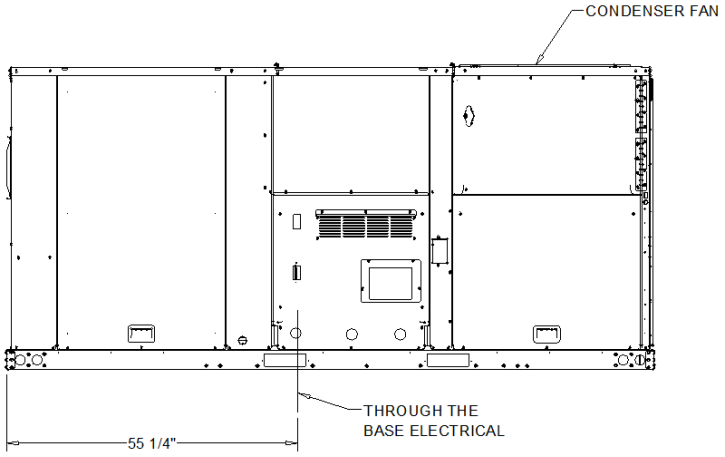


THROUGH-THE-BASE ELECTRICAL (OPTION)

HEAT PUMP / ELECTRIC HEAT HIGH EFFICIENCY

**This proposal is subject to your acceptance of the attached Trane terms and conditions.**


© 2026 Trane Technologies. All Rights Reserved.
Confidential and Proprietary Information of Trane U.S. Inc.

**TERMS AND CONDITIONS - COMMERCIAL EQUIPMENT**

**"Company" shall mean Trane U.S. Inc. for sales in the United States and Trane Canada ULC for sales in Canada.**

**1. Acceptance. These terms and conditions are an integral part of Company's offer and form the basis of any agreement (the "Agreement") resulting from Company's proposal (the "Proposal") for the sale of the described commercial equipment and any ancillary services (the "Equipment"). COMPANY'S TERMS AND CONDITIONS AND EQUIPMENT PRICES ARE SUBJECT TO PERIODIC CHANGE OR AMENDMENT**. The Proposal is subject to acceptance in writing by the party to whom this offer is made or an authorized agent ("Customer") delivered to Company within 15 days from the date of the Proposal. Prices in the Proposal are subject to change at any time upon notice to Customer. If Customer accepts the Proposal by placing an order, without the addition of any other terms and conditions of sale or any other modification, Customer's order shall be deemed acceptance of the Proposal subject to Company's terms and conditions. If Customer's order is expressly conditioned upon Company's acceptance or assent to terms and/or conditions other than those expressed herein, return of such order by Company with Company's terms and conditions attached or referenced serves as Company's notice of objection to Customer's terms and as Company's counteroffer to provide Equipment in accordance with the Proposal and the Company's terms and conditions. If Customer does not reject or object in writing to Company within 10 days, Company's counteroffer will be deemed accepted. Notwithstanding anything to the contrary herein, Customer's acceptance of the Equipment will in any event constitute an acceptance by Customer of Company's terms and conditions. This Agreement is subject to credit approval by Company. Upon disapproval of credit, Company may delay or suspend performance or, at its option, renegotiate prices and/or terms and conditions with Customer. If Company and Customer are unable to agree on such revisions, this Agreement shall be cancelled without any liability.

**2. Connected Services.** In addition to these terms and conditions, the Connected Services Terms of Service ("Connected Services Terms"), available at https://www.trane.com/TraneConnectedServicesTerms, as updated from time to time, are incorporated herein by reference and shall apply to the extent that Company provides Customer with Connected Services, as defined in the Connected Services Terms.

**3. Title and Risk of Loss.** All Equipment sales with destinations to Canada or the U.S. shall be made as follows: FOB Company's U.S. manufacturing facility or warehouse (full freight allowed). Title and risk of loss or damage to Equipment will pass to Customer upon tender of delivery of such to carrier at Company's U.S. manufacturing facility or warehouse.

**4. Pricing and Taxes.**, Within forty-five (45) days following Customer acceptance of the Proposal without addition of any other terms and conditions of sale or any modification, Customer shall provide notification of release for immediate production at Company's factory. Prices for Equipment are subject to change at any time prior to shipment to reflect any cost increases related to the manufacture, supply, and shipping of Equipment. This includes, but is not limited to, cost increases in raw materials, supplier components, labor, utilities, freight, logistics, wages and benefits, regulatory compliance, or any other event beyond Company's control. If shipment is delayed due to Customer's actions, Company may also charge Customer with storage fees. If a release is not received within 6 months following order acceptance, Company reserves the right to cancel any order. Company shall be entitled to equitable adjustments in the contract price to reflect any cost increases as set forth above and will provide notice to Customer prior to the date for which the increased price is to be in effect for the applicable customer contract. In no event will prices be decreased. The price of Equipment does not include any present or future foreign, federal, state, or local property, license, privilege, sales, use, excise, value added, gross receipts or other like taxes or assessments. Such amounts will be itemized separately to Customer, who will make prompt payment to Company. Company will accept valid exemption documentation for such taxes and assessments from Customer, if applicable. All prices include packaging in accordance with Company's standard procedures. Charges for special packaging, crating or packing are the responsibility of Customer.

**5. Delivery and Delays.** Delivery dates are approximate and not guaranteed. Company will use commercially reasonable efforts to deliver the Equipment on or before the estimated delivery date, will notify Customer if the estimated delivery dates cannot be honored, and will deliver the Equipment and services as soon as practicable thereafter. In no event will Company be liable for any damages or expenses caused by delays in delivery.

**6. Performance.** Company shall be obligated to furnish only the Equipment described in the Proposal and in submittal data (if such data is issued in connection with the order). Company may rely on the acceptance of the Proposal and submittal data as acceptance of the suitability of the Equipment for the particular project or location. Unless specifically stated in the Proposal, compliance with any local building codes or other laws or regulations relating to specifications or the location, use or operation of the Equipment is the sole responsibility of Customer. If Equipment is tendered that does not fully comply with the provisions of this Agreement and Equipment is rejected by Customer, Company will have the right to cure within a reasonable time after notice thereof by substituting a conforming tender whether or not the time for performance has passed.

**7. Force Majeure.** Company's duty to perform under this Agreement and the Equipment prices are contingent upon the non-occurrence of an Event of Force Majeure. If the Company shall be unable to carry out any material obligation under this Agreement due to an Event of Force Majeure, this Agreement shall at Company's election (i) remain in effect but Company's obligations shall be suspended until the uncontrollable event terminates or (ii) be terminated upon 10 days' notice to Customer, in which event Customer shall pay Company for all parts of the Work furnished to the date of termination. An "Event of Force Majeure" shall mean any cause or event beyond the control of Company. Without limiting the foregoing, "Event of Force Majeure" includes: acts of God; acts of terrorism, war or the public enemy; flood; earthquake; tornado; storm; fire; civil disobedience; pandemic insurrections; riots; labor/labour disputes; labor/labour or material shortages; sabotage; restraint by court order or public authority (whether valid or invalid); and action or non-action by or inability to obtain or keep in force the necessary governmental authorizations, permits, licenses, certificates or approvals if not caused by Company; and the requirements of any applicable government in any manner that diverts either the material or the finished product to the direct or indirect benefit of the government.

**8. Limited Warranty.** Company warrants the Equipment manufactured by Company for a period of the lesser of 12 months from initial start-up or 18 months from date of shipment, whichever is less, against failure due to defects in material and manufacture and that it has the capacities and ratings set forth in Company's catalogs and bulletins ("Warranty"). **Equipment manufactured by Company that includes required start-up and sold in North America will not be warranted by Company unless Company performs the Equipment startup**. Exclusions from this Warranty include damage or failure arising from: wear and tear; corrosion, erosion, deterioration; modifications made by others to the Equipment; repairs or alterations by a party other than Company that adversely affects the stability or reliability of the Equipment; vandalism; neglect; accident; adverse weather or environmental conditions; abuse or improper use; improper installation; commissioning by a party other than Company; unusual physical or electrical or mechanical stress; operation with any accessory, equipment or part not specifically approved by Company; refrigerant not supplied by Company; and/or lack of proper maintenance as recommended by Company. Company shall not be obligated to pay for the cost of lost refrigerant or lost product. Company's obligations and liabilities under this Warranty are limited to furnishing replacement equipment or parts, at its option, FCA (Incoterms 2000) factory or warehouse (f.o.b. factory or warehouse for US domestic purposes) at Company-designated shipping point, freight-allowed to Company's warranty agent's stock location, for all non-conforming Company-manufactured Equipment (which have been returned by Customer to Company). Returns must have prior written approval by Company and are subject to restocking charge where applicable. Equipment, material and/or parts that are not manufactured by Company ("Third-Party Product(s)") are not warranted by Company and have such warranties as may be extended by the respective manufacturer. **CUSTOMER UNDERSTANDS THAT COMPANY IS NOT THE MANUFACTURER OF ANY THIRD-PARTY PRODUCT(S) AND ANY WARRANTIES, CLAIMS, STATEMENTS, REPRESENTATIONS, OR SPECIFICATIONS ARE THOSE OF THE THIRD-PARTY MANUFACTURER, NOT COMPANY AND CUSTOMER IS NOT RELYING ON ANY WARRANTIES, CLAIMS, STATEMENTS, REPRESENTATIONS, OR SPECIFICATIONS REGARDING THE THIRD-PARTY PRODUCT THAT MAY BE PROVIDED BY COMPANY OR ITS AFFILIATES, WHETHER ORAL OR WRITTEN. COMPANY MAKES NO REPRESENTATION OR WARRANTY OF ANY KIND, INCLUDING WARRANTY OF MERCHANTABILITY OR FITNESS FOR PARTICULAR PURPOSE.ADDITIONALLY, COMPANY MAKES NO REPRESENTATION OR WARRANTY OF ANY KIND REGARDING PREVENTING., ELIMINATING, REDUCING OR INHIBITING ANY MOLD, FUNGUS, BACTERIA, VIRUS, MICROBIAL GROWTH, OR ANY OTHER CONTAMINANTS (INCLUDING COVID-19 OR ANY SIMILAR VIRUS) (COLLECTIVELY, "CONTAMINANTS"), WHETHER INVOLVING OR IN CONNECTION WITH EQUIPMENT, ANY COMPONENT THEREOF, SERVICES OR OTHERWISE. IN NO EVENT SHALL COMPANY HAVE ANY LIABILITY FOR THE PREVENTION, ELIMINATION, REDUCTION OR INHIBITION OF THE GROWTH OR SPREAD OF SUCH CONTAMINANTS INVOLVING OR IN CONNECTION WITH ANY EQUIPMENT, THIRD-PARTY PRODUCT, OR ANY COMPONENT THEREOF, SERVICES OR OTHERWISE AND CUSTOMER HEREBY SPECIFICALLY ACKNOWLDGES AND AGREES THERETO.** No warranty liability whatsoever shall attach to Company until Customer's complete order has been paid for in full and Company's liability under this Warranty shall be limited to the purchase price of the Equipment shown to be defective. Additional warranty protection is available on an extra-cost basis and must be in writing and agreed to by an authorized signatory of the Company. **EXCEPT FOR COMPANY'S WARRANTY EXPRESSLY SET FORTH HEREIN, COMPANY DOES NOT MAKE, AND HEREBY EXPRESSLY DISCLAIMS, ANY WARRANTIES, EXPRESS OR IMPLIED CONCERNING ITS PRODUCTS, EQUIPMENT OR SERVICES, INCLUDING, WITHOUT LIMITATION, ANY WARRANTY OF DESIGN, MERCHANTABILITY OR OF FITNESS FOR A PARTICULAR PURPOSE, OR OTHERS THAT ARE ALLEGED TO ARISE FROM COURSE OF DEALING OR TRADE.**

**9. Indemnity.** To the fullest extent permitted by law, Company and Customer shall indemnify, defend and hold harmless each other from any and all claims, actions, costs, expenses, damages and liabilities, including reasonable attorneys' fees, resulting from death or bodily injury or damage to real or personal property, to the extent caused by the negligence or misconduct of their respective employees or other authorized agents in connection with their activities within the scope of this Agreement. Neither party shall indemnify the other against claims, damages, expenses or liabilities to the extent attributable to the acts or omissions of the other party. If the parties are both at fault, the obligation to indemnify shall be proportional to their relative fault. The duty to indemnify will continue in full force and effect, notwithstanding the expiration or early termination hereof, with respect to any claims based on facts or conditions that occurred prior to expiration or termination.


© 2026 Trane Technologies. All Rights Reserved.
Confidential and Proprietary Information of Trane U.S. Inc.

**10. Insurance.** Upon request, Company will furnish evidence of its standard insurance coverage. If Customer has requested to be named as an additional insured under Company's insurance policy, Company will do so but only subject to Company's manuscript additional insured endorsement under its primary Commercial General Liability policies. In no event does Company waive any rights of subrogation.

**11. Customer Breach.** Each of the following events or conditions shall constitute a breach by Customer and shall give Company the right, without an election of remedies, to terminate this Agreement, require payment prior to shipping, or suspend performance by delivery of written notice: (1) Any failure by Customer to pay amounts when due; (2) any general assignment by Customer for the benefit of its creditors, or if Customer becomes bankrupt or insolvent or takes the benefit of any statute for bankrupt or insolvent debtors, or makes or proposes to make any proposal or arrangement with creditors, or if any steps are taken for the winding up or other termination of Customer or the liquidation of its assets, or if a trustee, receiver, or similar person is appointed over any of the assets or interests of Customer; (3) Any representation or warranty furnished by Customer in connection with this Agreement is false or misleading in any material respect when made; or (4) Any failure by Customer to perform or comply with any material provision of this Agreement. Customer shall be liable to the Company for all Equipment furnished and all damages sustained by Company (including lost profit and overhead).

**12. Limitation of Liability. NOTWITHSTANDING ANYTHING TO THE CONTRARY, IN NO EVENT SHALL COMPANY BE LIABLE FOR ANY SPECIAL, INCIDENTAL, INDIRECT CONSEQUENTIAL, PUNITIVE, EXEMPLARY DAMAGES (INCLUDING WITHOUT LIMITATION REFRIGERANT LOSS, BUSINESS INTERRUPTION, LOST DATA, LOST REVENUE, LOST PROFITS),OR CONTAMINANTS LIABILITIES, EVEN IF A PARTY HAS BEEN ADVISED OF SUCH POSSIBLE DAMAGES OR IF SAME WERE REASONABLY FORESEEABLE AND REGARDLESS OF WHETHER THE CAUSE OF ACTION IS FRAMED IN CONTRACT, NEGLIGENCE, ANY OTHER TORT, WARRANTY, STRICT LIABILITY, OR PRODUCT LIABILITY. In no event will Company's liability in connection with the provision of products or services or otherwise under this Agreement exceed the entire amount paid to Company by Customer under this Agreement.**

**13. CONTAMINANTS LIABILITY**

The transmission of COVID-19 may occur in a variety of ways and circumstances, many of the aspects of which are currently not known. HVAC systems, products, services and other offerings have not been tested for their effectiveness in reducing the spread of COVID-19, including through the air in closed environments**. IN NO EVENT WILL COMPANY BE LIABLE UNDER THIS AGREEMENT OR OTHERWISE FOR ANY INDEMNIFICATION, ACTION, OR CLAIM, WHETHER BASED ON WARRANTY, CONTRACT, TORT OR OTHERWISE, FOR ANY BODILY INJURY (INCLUDING DEATH), DAMAGE TO PROPERTY, OR ANY OTHER LIABILITIES, DAMAGES OR COSTS RELATED TO CONTAMINANTS (INCLUCING THE SPREAD, TRANSMISSION, MITIGATION, ELIMINATION, OR CONTAMINATION THEREOF) (COLLECTIVELY, "CONTAMINANTS LIABILITIES") AND CUSTOMER HEREBY EXPRESSLY RELEASES COMPANY FROM ANY SUCH CONTAMINANTS LIABILITIES.**

**14. Nuclear Liability.** In the event that the Equipment sold hereunder is to be used in a nuclear facility, Customer will, prior to such use, arrange for insurance or governmental indemnity protecting Company against all liability and hereby releases and agrees to indemnify Company and its suppliers for any nuclear damage, including loss of use, in any manner arising out of a nuclear incident, whether alleged to be due, in whole or in part to the negligence or otherwise of Company or its suppliers.

**15. Intellectual Property; Patent Indemnity.** Company retains all ownership, license and other rights to all patents, trademarks, copyrights, trade secrets and other intellectual property rights related to the Equipment, and, except for the right to use the Equipment sold, Customer obtains no rights to use any such intellectual property. Company agrees to defend any suit or proceeding brought against Customer so far as such suit or proceeding is solely based upon a claim that the use of the Equipment provided by Company constitutes infringement of any patent of the United States of America, provided Company is promptly notified in writing and given authority, information and assistance for defense of same. Company will, at its option, procure for Customer the right to continue to use said Equipment, or modify it so that it becomes non-infringing, or replace same with non-infringing Equipment, or to remove said Equipment and to refund the purchase price. The foregoing will not be construed to include any Agreement by Company to accept any liability whatsoever in respect to patents for inventions including more than the Equipment furnished hereunder, or in respect of patents for methods and processes to be carried out with the aid of said Equipment. The provision of Equipment by Company does not convey any license, by implication, estoppel, or otherwise, under patent claims covering combinations of said Equipment with other devices or elements. The foregoing states the entire liability of Company with regard to patent infringement. Notwithstanding the provisions of this paragraph, Customer will hold Company harmless against any expense or loss resulting from infringement of patents or trademarks arising from compliance with Customer's designs or specifications or instructions.

**16. Cancellation.** Equipment is specially manufactured in response to orders. An order placed with and accepted by Company cannot be delayed, canceled, suspended, or extended except with Company's written consent and upon written terms accepted by Company that will reimburse Company for and indemnify Company against loss and provide Company with a reasonable profit for its materials, time, labor, services, use of facilities and otherwise. Customer will be obligated to accept any Equipment shipped, tendered for delivery or delivered by Company pursuant to the order prior to any agreed delay, cancellation, suspension or extension of the order. Any attempt by Customer to unilaterally revoke, delay or suspend acceptance for any reason whatever after it has agreed to delivery of or accepted any shipment shall constitute a breach of this Agreement. For purposes of this paragraph, acceptance occurs by any waiver of inspection, use or possession of Equipment, payment of the invoice, or any indication of exclusive control exercised by Customer.

**17. Invoicing and Payment.** Unless otherwise agreed to in writing by Company, equipment shall be invoiced to Customer upon tender of delivery thereof to the carrier. Customer shall pay Company's invoices within net 30 days of shipment date. Company reserves the right to add to any account outstanding for more than 30 days a service charge equal to the lesser of the maximum allowable legal interest rate or 1.5% of the principal amount due at the end of each month. Customer shall pay all costs (including attorneys' fees) incurred by Company in attempting to collect amounts due and otherwise enforcing these terms and conditions. If requested, Company will provide appropriate lien waivers upon receipt of payment. Company may at any time decline to ship, make delivery or perform work except upon receipt of cash payment, letter of credit, or security, or upon other terms and conditions satisfactory to Company. Customer agrees that, unless Customer makes payment in advance, Company will have a purchase money security interest in all Equipment to secure payment in full of all amounts due Company and its order for the Equipment, together with these terms and conditions, form a security agreement (as defined by the UCC in the United States and as defined in the Personal Property Security Act in Canada). Customer shall keep the Equipment free of all taxes and encumbrances, shall not remove the Equipment from its original installation point and shall not assign or transfer any interest in the Equipment until all payments due Company have been made. The purchase money security interest granted herein attaches upon Company's acceptance of Customer's order and on receipt of the Equipment described in the accepted Proposal but prior to its installation. The parties have no agreement to postpone the time for attachment unless specifically noted in writing on the accepted order. Customer will have no rights of set off against any amounts, which become payable to Company under this Agreement or otherwise.

**18. Claims.** Company will consider claims for concealed shortages in shipments or rejections due to failure to conform to an order only if such claims or rejections are made in writing within 15 days of delivery and are accompanied by the packing list and, if applicable, the reasons in detail why the Equipment does not conform to Customer's order. Upon receiving authorization and shipping instructions from authorized personnel of Company, Customer may return rejected Equipment, transportation charges prepaid, for replacement. Company may charge Customer any costs resulting from the testing, handling, and disposition of any Equipment returned by Customer which are not found by Company to be nonconforming. All Equipment damaged during shipment and all claims relating thereto must be made with the freight carrier in accordance with such carrier's policies and procedures. Claims for Equipment damaged during shipment are not covered under the warranty provision stated herein.

**19. Export Laws.** The obligation of Company to supply Equipment under this Agreement is subject to the ability of Company to supply such items consistent with applicable laws and regulations of the United States and other governments. Company reserves the right to refuse to enter into or perform any order, and to cancel any order, under this Agreement if Company in its sole discretion determines that performance of the transaction to which such order relates would violate any such applicable law or regulation. Customer will pay all handling and other similar costs from Company's factories including the costs of freight, insurance, export clearances, import duties and taxes. Customer will be "exporter of record" with respect to any export from the United States of America and will perform all compliance and logistics functions in connection therewith and will also comply with all applicable laws, rules and regulations. Customer understands that Company and/or the Equipment are subject to laws and regulations of the United States of America which may require licensing or authorization for and/or prohibit export, re-export or diversion of Company's Equipment to certain countries, and agrees it will not knowingly assist or participate in any such diversion or other violation of applicable United States of America laws and regulations. Customer agrees to hold harmless and indemnify Company for any damages resulting to Customer or Company from a breach of this paragraph by Customer.

**20. General.** Except as provided below, to the maximum extent provided by law, this Agreement is made and shall be interpreted and enforced in accordance with the laws of the state of New York for Equipment shipped to a U.S. location and the laws of the province to which Equipment is shipped within Canada, without regard to its conflict of law principles that might otherwise call for the application of a different state's or province's law, and not including the United Nations Convention on Contracts for the International Sale of Goods. To the extent the Equipment is being used at a site owned and/or operated by any agency of the Federal Government, determination of any substantive issue of law shall be according to the Federal common law of Government contracts as enunciated and applied by Federal judicial bodies and boards of contract appeals of the Federal Government. This Agreement contains all of the agreements, representations and understandings of the parties and supersedes all previous understandings, commitments or agreements, oral or written, related to the subject matter hereof. This Agreement may not be amended, modified or terminated except by a writing signed by the parties hereto. No documents shall be incorporated herein by reference except to the extent Company is a signatory thereon. If any term or condition of this Agreement is invalid, illegal or incapable of being enforced by any rule of law, all other terms and conditions of this Agreement will nevertheless remain in full force and effect as long as the economic or legal substance of the transaction contemplated hereby is not affected in a manner adverse to any party hereto. Customer may not assign, transfer, or convey this Agreement, or any part hereof, or its right, title or interest herein, without the written consent of the Company. Subject to the foregoing, this Agreement shall be binding upon and inure to the benefit of Customer's permitted successors and assigns. This Agreement may be executed in several


© 2026 Trane Technologies. All Rights Reserved.
Confidential and Proprietary Information of Trane U.S. Inc.

counterparts, each of which when executed shall be deemed to be an original, but all together shall constitute but one and the same Agreement. A fully executed facsimile copy hereof or the several counterparts shall suffice as an original.

**21. Federal Requirements.** The Parties shall comply with all United States federal labor law obligations under 29 CFR part 471, appendix A to subpart A. THE FOLLOWING PROVISIONS ARE INCORPORATED HEREIN BY REFERENCE: Executive Order 11701 and 41 CFR §§ 60-250.5(a), 60-300.5; Executive Order 11758 and 41 CFR § 60-741.5(a); U.S. immigration laws, including the L-1 Visa Reform Act of 2004 and the H-1B Visa Reform Act of 2004; and Executive Order 13496. The Parties shall abide by the requirements of 41 CFR 60-300.5(a) and 60-741.5(a). These regulations prohibit discrimination against qualified individuals based on their status as protected veterans or individuals with disabilities. Moreover, these regulations require that covered prime contractors and subcontractors take affirmative action to employ and advance in employment individuals without regard to protected veteran status or disability. The Parties certify that they do not operate any programs promoting DEI that violate any applicable United States anti-discrimination laws and acknowledge and agree that their compliance with all applicable federal anti-discrimination laws is material to the federal government's payment decisions. The Parties acknowledge and agree that their employment, procurement, and contracting practices shall not consider race, color, sex, sexual preference, religion, or national origin in ways that violate United States federal civil rights laws.

**22. U.S. Government Work.**

**The following provision applies only to direct sales by Company to the US Government.** The Parties acknowledge that Equipment ordered and delivered under this Agreement are Commercial Items as defined under Part 12 of the Federal Acquisition Regulation (FAR). In particular, Company agrees to be bound only by those Federal contracting clauses that apply to "commercial" suppliers and that are contained in FAR 52.212-5(e)(1).

**The following provision applies only to indirect sales by Company to the US Government.** As a Commercial Item Subcontractor, Company accepts only the following mandatory flow down provisions: 52.219-8; 52.222-26; 52.222-35; 52.222-36; 52.222-39; 52.247-64. If the sale of the Equipment is in connection with a U.S. Government contract, Customer certifies that it has provided and will provide current, accurate, and complete information, representations and certifications to all government officials, including but not limited to the contracting officer and officials of the Small Business Administration, on all matters related to the prime contract, including but not limited to all aspects of its ownership, eligibility, and performance. Anything herein notwithstanding, Company will have no obligations to Customer unless and until Customer provides Company with a true, correct and complete executed copy of the prime contract. Upon request, Customer will provide copies to Company of all requested written communications with any government official related to the prime contract prior to or concurrent with the execution thereof, including but not limited to any communications related to Customer's ownership, eligibility or performance of the prime contract. Customer will obtain written authorization and approval from Company prior to providing any government official any information about Company's performance of the work that is the subject of the Proposal or this Agreement, other than the Proposal or this Agreement.

**23. Limited Waiver of Sovereign Immunity**. If Customer is an Indian tribe (in the U.S.) or a First Nation or Band Council (in Canada), Customer, whether acting in its capacity as a government, governmental entity, a duly organized corporate entity or otherwise, for itself and for its agents, successors, and assigns: (1) hereby provides this limited waiver of its sovereign immunity as to any damages, claims, lawsuit, or cause of action (herein "Action") brought against Customer by Company and arising or alleged to arise out of the furnishing by Company of any product or service under this Agreement, whether such Action is based in contract, tort, strict liability, civil liability or any other legal theory; (2) agrees that jurisdiction and venue for any such Action shall be proper and valid (a) if Customer is in the U.S., in any state or United States court located in the state in which Company is performing this Agreement or (b) if Customer is in Canada, in the superior court of the province or territory in which the work was performed; (3) expressly consents to such Action, and waives any objection to jurisdiction or venue; (4) waives any requirement of exhaustion of tribal court or administrative remedies for any Action arising out of or related to this Agreement; and (5) expressly acknowledges and agrees that Company is not subject to the jurisdiction of Customer's tribal court or any similar tribal forum, that Customer will not bring any action against Company in tribal court, and that Customer will not avail itself of any ruling or direction of the tribal court permitting or directing it to suspend its payment or other obligations under this Agreement. The individual signing on behalf of Customer warrants and represents that such individual is duly authorized to provide this waiver and enter into this Agreement and that this Agreement constitutes the valid and legally binding obligation of Customer, enforceable in accordance with its terms.

1-26.130-4 (0225)
Supersedes 1-26.130-4(1024)


© 2026 Trane Technologies. All Rights Reserved.
Confidential and Proprietary Information of Trane U.S. Inc.

**SECURITY ADDENDUM**

This Addendum shall be applicable to the sale, installation and use of Trane equipment and the sale and provision of Trane services. "Trane" shall mean Trane U.S. Inc. for sales and services in the United States, or Trane Canada ULC for sales and services in Canada.

1. **Definitions.** All terms used in this Addendum shall have the meaning specified in the Agreement unless otherwise defined herein. For the purposes of this Addendum, the following terms are defined as follows:
"Customer Data" means Customer account information as related to the Services only and does not include HVAC Machine Data or personal data. Trane does not require, nor shall Customer provide personal data to Trane under the Agreement. Such data is not required for Trane to provide its Equipment and/or Services to the Customer.
"Equipment" shall have the meaning set forth in the Agreement.
"HVAC Machine Data" means data generated and collected from the product or furnished service without manual entry. HVAC Machine Data is data relating to the physical measurements and operating conditions of a HVAC system, such as but not limited to, temperatures, humidity, pressure, HVAC equipment status. HVAC Machine Data does not include Personal Data and, for the purposes of this agreement, the names of users of Trane's controls products or hosted applications shall not be Personal Data, if any such user chooses to use his/her name(s) in the created accounts within the controls product (e.g., firstname.lastname@address.com). HVAC Machine Data may be used by Trane: (a) to provide better support services and/or products to users of its products and services; (b) to assess compliance with Trane terms and conditions; (c) for statistical or other analysis of the collective characteristics and behaviors of product and services users; (d) to backup user and other data or information and/or provide remote support and/or restoration; (e) to provide or undertake: engineering analysis; failure analysis; warranty analysis; energy analysis; predictive analysis; service analysis; product usage analysis; and/or other desirable analysis, including, but not limited to, histories or trends of any of the foregoing; and (f) to otherwise understand and respond to the needs of users of the product or furnished service. "Personal Data" means data and/or information that is owned or controlled by Customer, and that names or identifies, or is about a natural person, such as: (i) data that is explicitly defined as a regulated category of data under any data privacy laws applicable to Customer; (ii) non-public personal information ("NPI") or personal information ("PI"), such as national identification number, passport number, social security number, social insurance number, or driver's license number; (iii) health or medical information, such as insurance information, medical prognosis, diagnosis information, or genetic information; (iv) financial information, such as a policy number, credit card number, and/or bank account number; (v) personally identifying technical information (whether transmitted or stored in cookies, devices, or otherwise), such as IP address, MAC address, device identifier, International Mobile Equipment Identifier ("IMEI"), or advertising identifier; (vi) biometric information; and/or (vii) sensitive personal data, such as, race, religion, marital status, disability, gender, sexual orientation, geolocation, or mother's maiden name.
"Security Incident" shall refer to (i) a compromise of any network, system, application or data in which Customer Data has been accessed or acquired by an unauthorized third party; (ii) any situation where Trane reasonably suspects that such compromise may have occurred; or (iii) any actual or reasonably suspected unauthorized or illegal Processing, loss, use, disclosure or acquisition of or access to any Customer Data.
"Services" shall have the meaning set forth in the Agreement.

2. HVAC Machine Data; Access to Customer Extranet and Third Party Systems. If Customer grants Trane access to HVAC Machine Data via web portals or other non-public websites or extranet services on Customer's or a third party's website or system (each, an "Extranet"), Trane will comply with the following:
    a. Accounts. Trane will ensure that Trane's personnel use only the Extranet account(s) designated by Customer and will require Trane personnel to keep their access credentials confidential.
    b. Systems. Trane will access the Extranet only through computing or processing systems or applications running operating systems managed by Trane that include: (i) system network firewalls; (ii) centralized patch management; (iii) operating system appropriate anti-malware software; and (iv) for portable devices, full disk encryption.
    c. Restrictions. Unless otherwise approved by Customer in writing, Trane will not download, mirror or permanently store any HVAC Machine Data from any Extranet on any medium, including any machines, devices or servers.
    d. Account Termination. Trane will terminate the account of each of Trane's personnel in accordance with Trane's standard practices after any specific Trane personnel who has been authorized to access any Extranet (1) no longer needs access to HVAC Machine Data or (2) no longer qualifies as Trane personnel (e.g., the individual leaves Trane's employment).
    e. Third Party Systems. Trane will provide Customer prior notice before it uses any third party system that stores or may otherwise have access to HVAC Machine Data, unless (1) the data is encrypted and (2) the third party system will not have access to the decryption key or unencrypted "plain text" versions of the HVAC Machine Data.

3. Customer Data; Confidentiality. Trane shall keep confidential, and shall not access or use any Customer Data and information that is marked confidential or by its nature is considered confidential ("Customer Confidential Information") other than for the purpose of providing the Equipment and Services, and will disclose Customer Confidential Information only: (i) to Trane's employees and agents who have a need to know to perform the Services, (ii) as expressly permitted or instructed by Customer, or (iii) to the minimum extent required to comply with applicable law, provided that Trane (1) provides Customer with prompt written notice prior to any such disclosure, and (2) reasonably cooperate with Customer to limit or prevent such disclosure.

4. Customer Data; Compliance with Laws. Trane agrees to comply with laws, regulations governmental requirements and industry standards and practices relating to Trane's processing of Customer Confidential Information (collectively, "***Laws***").

5. Customer Data; Information Security Management. Trane agrees to establish and maintain an information security and privacy program, consistent with applicable HVAC equipment industry practices that complies with this Addendum and applicable Laws ("***Information Security Program***"). The Information Security Program shall include appropriate physical, technical and administrative safeguards, including any safeguards and controls agreed by the Parties in writing, sufficient to protect Customer systems, and Customer's Confidential Information from unauthorized access, destruction, use, modification or disclosure. The Information Security Program shall include appropriate, ongoing training and awareness programs designed to ensure that Trane's employees and agents, and others acting on Trane's, behalf are aware of and comply with the Information Security Program's policies, procedures, and protocols.

6. Monitoring. Trane shall monitor and, at regular intervals consistent with HVAC equipment industry practices, test and evaluate the effectiveness of its Information Security Program. Trane shall evaluate and promptly adjust its Information Security Program in light of the results of the testing and monitoring, any material changes to its operations or business arrangements, or any other facts or circumstances that Trane knows or reasonably should know may have a material impact on the security of Customer Confidential Information, Customer systems and Customer property.

7. Audits. Customer acknowledges and agrees that the Trane SOC2 audit report will be used to satisfy any and all audit/inspection requests/requirements by or on behalf of Customer. Trane will make its SOC2 audit report available to Customer upon request and with a signed nondisclosure agreement.

8. Information Security Contact. Trane's information security contact is Local Sales Office.

9. Security Incident Management. Trane shall notify Customer after the confirmation of a Security Incident that affects Customer Confidential Information, Customer systems and Customer property. The written notice shall summarize the nature and scope of the Security Incident and the corrective action already taken or planned.

10. Threat and Vulnerability Management. Trane regularly performs vulnerability scans and addresses detected vulnerabilities on a risk basis. Periodically, Trane engages third-parties to perform network vulnerability assessments and penetration testing. Vulnerabilities will be reported in accordance with Trane's cybersecurity vulnerability reported process. Trane periodically provides security updates and software upgrades.

11. Security Training and Awareness. New employees are required to complete security training as part of the new hire process and receive annual and targeted training (as needed and appropriate to their role) thereafter to help maintain compliance with Security Policies, as well as other corporate policies, such as the Trane Code of Conduct. This includes requiring Trane employees to annually re-acknowledge the Code of Conduct and other Trane policies as appropriate. Trane conducts periodic security awareness campaigns to educate personnel about their responsibilities and provide guidance to create and maintain a secure workplace.


© 2026 Trane Technologies. All Rights Reserved.
Confidential and Proprietary Information of Trane U.S. Inc.

12. Secure Disposal Policies. Trane will maintain policies, processes, and procedures regarding the disposal of tangible and intangible property containing Customer Confidential Information so that wherever possible, Customer Confidential Information cannot be practicably read or reconstructed.

13. Logical Access Controls. Trane employs internal monitoring and logging technology to help detect and prevent unauthorized access attempts to Trane's corporate networks and production systems. Trane's monitoring includes a review of changes affecting systems' handling authentication, authorization, and auditing, and privileged access to Trane production systems. Trane uses the principle of "least privilege" (meaning access denied unless specifically granted) for access to customer data.

14. Contingency Planning/Disaster Recovery. Trane will implement policies and procedures required to respond to an emergency or other occurrence (i.e. fire, vandalism, system failure, natural disaster) that could damage Customer Data or any system that contains Customer Data. Procedures include the following
    (i) Data backups; and
    (ii) Formal disaster recovery plan. Such disaster recovery plan is tested at least annually.

15. Return of Customer Data. If Trane is responsible for storing or receiving Customer Data, Trane shall, at Customer's sole discretion, deliver Customer Data to Customer in its preferred format within a commercially reasonable period of time following the expiration or earlier termination of the Agreement or, such earlier time as Customer requests, securely destroy or render unreadable or undecipherable each and every original and copy in every media of all Customer's Data in Trane's possession, custody or control no later than [90 days] after receipt of Customer's written instructions directing Trane to delete the Customer Data.

16. Background Checks Trane shall take reasonable steps to ensure the reliability of its employees or other personnel having access to the Customer Data, including the conducting of appropriate background and/or verification checks in accordance with Trane policies.

17. DISCLAIMER OF WARRANTIES. EXCEPT FOR ANY APPLICABLE WARRANTIES IN THE AGREEMENT, THE SERVICES ARE PROVIDED "AS IS", WITH ALL FAULTS, AND THE ENTIRE RISK AS TO SATISFACTORY QUALITY, PERFORMANCE, ACCURACY AND EFFORT AS TO SUCH SERVICES SHALL BE WITH CUSTOMER. TRANE DISCLAIMS ANY AND ALL OTHER EXPRESS OR IMPLIED REPRESENTATIONS AND WARRANTIES WITH RESPECT TO THE SERVICES AND THE SERVICES PROVIDED HEREUNDER, INCLUDING ANY EXPRESS OR IMPLIED WARRANTY OF MERCHANTABILITY, FITNESS FOR A PARTICULAR PURPOSE, OR THAT THE SERVICES WILL OPERATE ERROR-FREE OR UNINTERRUPTED OR RETURN/RESPONSE TO INQUIRIES WITHIN ANY SPECIFIC PERIOD OF TIME.

October 2024
Supersedes: November 2023v2


© 2026 Trane Technologies. All Rights Reserved.
Confidential and Proprietary Information of Trane U.S. Inc.

# Accident / Incident Report

| | | |
|---|---|---|
| **Policy #:** | **Policy Period:** | **CJS Contact:** Jamie 781-424-3371 |

## Time and Place of Incident

| | |
|---|---|
| **Time:** AM | **Date:** 01/09/26 |
| **Exact Location:** 150 Flanders Rd. Westborough, MA | |
| **Weather / Road Conditions** Sunny / 40 degrees | |

## If Incident Occurred on a Job Site

| | |
|---|---|
| **Job Site Name:** 150 Flanders Rd. | **Address:** 150 Flanders Rd. Westborough, MA |
| **Customer Name:** Limbach | **Customer Contact:** |

## CJS Driver/Operator and Vehicle/Equipment

| | |
|---|---|
| **Name:** Bernie Rhouda | **DOB:** 11/08/1954 |
| **Address:** 9 Border Rd. Holbrook, MA | **Telephone #:** 617-594-4048 |
| **License #:** S91042507 | **State of Issue:** MA |
| **CJS Vehicle #:** 54 | **Make / Model:** 2003 Kenworth W900 |
| **CJS VIN #:** 1XKWD40X33J392929 | **Plate #:** S48143 |
| **Damage to CJS Vehicle / Equipment:** N/A | |

## Other Vehicle / Driver

| | | |
|---|---|---|
| **Operator's Name:** N/A | **DOB:** N/A | |
| **Address:** N/A | **Telephone #:** N/A | **Sex:** N/A |
| **License #:** N/A | **State of Issue:** N/A | **Exp. Date:** N/A |
| **Make / Model:** N/A | **Color:** N/A | |
| **VIN #:** N/A | **Plate #:** N/A | **State Reg:** N/A |
| **Owner's Name (if different):** N/A | | |
| **Address:** N/A | | |
| **Owner's Home Tel #:** N/A | **Business Tel #:** N/A | |
| **Damage to other Vehicle / Equipment:** N/A | | |
| **Prior Damage Evident:** N/A | | |
| **Insurance Company:** N/A | | |

## Property / Equipment Damage

| | | | |
|---|---|---|---|
| **Property Owner:** | Limbach | **Phone #:** | |
| **Property Address:** | 150 Flanders Rd. Westborough, MA / Jobstie | | |
| **Description of Damage:** | Visible damage to the exterior corners of unit, as well as the under side near fans. | | |
| **Insurance Company:** | | | |

## Injuries

| **Name:** | **Injury:** | **Treatment:** |
|---|---|---|
| N/A | N/A | N/A |
| | | |
| | | |

## Witnesses

| **Name:** | **Address:** | **Telephone:** |
|---|---|---|
| Bernie Rhouda | | 617-594-4048 |
| Chris Dimmagio | | 617-968-9674 |
| | | |

## Police Report

| | | | | | |
|---|---|---|---|---|---|
| **Police Dept:** | N/A | **Officer:** | N/A | **Report #:** | N/A |
| **Citation Issued To:** | N/A | **#:** | N/A | | |

## Description of Accident

Picked up delivery from shop that was loaded on step deck trailer SDA-48-02 which consisted of three units. Drove to site in Westboro, MA and backed load up to crane which was setup at first location. No units were required to be offloaded at first location, so crane would need to relocate to 2nd location. Driver pulled truck out of the way so crane could pull out. While the driver was waiting for crane to move, he unstrapped the load in the parking lot. Once unstrapped, driver followed crane to 2nd setup location. When driver arrived at 2nd crane location on other side of building, he could not back in due to angle, cars in the way, and lawn area, so the truck was nosed up to the crane. First, 4 scrap units were taken down and set on the ground next to two units existing on the ground from the day before. One of the big new units existing on the ground was then picked to the roof, but did not line up with existing mounting location, so they brought it back down. When they brought the big unit back down, they set it on the upper deck of the trailer with the existing three units still not touched on the lower deck of trailer. Without realizing the upper deck of the trailer still had a layer of frost on it, the rigging job continued. The crew then picked off the three units from the lower deck of the trailer and sent to the roof for mounting. Once the new units were removed from lower deck of trailer, the scrap units previously set on the ground were loaded on to the lower part of the trailer. Before the the crane was to be moved, the crew needed a unit off of another trailer that was on site. Driver began to back out of the area from in front of the crane to drop current trailer in parking lot to strap units down and bring other trailer to be offloaded by crane. Driver moved truck forward to straighten out and then put in reverse and the big unit on the upper deck slid off the trailer falling to the ground. Truck was only on a very slight incline.

Cardona, Daniel <daniel.cardona@limbachinc.com>

# Whittier Westborough RTUs - unit damaged

**Hynes, Carolann** <CarolAnn.Hynes@tranetechnologies.com> Tue, Feb 3, 2026 at 3:00 PM
To: "Cardona, Daniel" <daniel.cardona@limbachinc.com>
Cc: "Hurd, Sean" <sean.hurd@limbachinc.com>, "Battaglia, Louis" <Louis.Battaglia@tranetechnologies.com>

Hi Daniel,

A manufacturer's warranty covers the units against damages in materials/parts causes by the factory.. The warranty is void if the unit is damaged during freight, installation, or caused by any other than the factory..

Let us know if you have any other questions..

Carolann

***Trane only has 3-5 days to file freight claims on your behalf, including concealed damage.***

***Please open and inspect each delivery upon arrival and contact us immediately if there is any damage or missing items.***

Carolann Hynes

Light Commercial Unitary Replacement

Account Manager

New England District

Trane Commercial Systems and Services

181 Ballardvale Street

Wilmington, Massachusetts 01887

USA

+1.978.737.3867 Office

+1.781.315.5497 Cell

Carolann.hynes@tranetechnologies.com

***** LCUR supports Precedent 3-10 tons, Voyager 12 ½ -25 tons, Foundation 3-5 tons, 15-25 tons, ProSpace Ptacs 7,000btu – 15,000 btu, Standard Efficiency WSHP ½ - 5 tons and Mitsubishi Parts *****

**To move forward with order please follow the acceptance link below:**

Online order acceptance (office.com)

---

**From:** Cardona, Daniel <daniel.cardona@limbachinc.com>
**Sent:** Monday, January 12, 2026 9:53 AM
**To:** Hynes, Carolann <CarolAnn.Hynes@tranetechnologies.com>; Battaglia, Louis <Louis.Battaglia@tranetechnologies.com>
**Cc:** Hurd, Sean <sean.hurd@limbachinc.com>; Eddie Ankiewicz (Tech - Super Intendent Limbach) <eddie.ankiewicz@limbachinc.com>
**Subject:** Whittier Westborough RTUs - unit damaged

Hi Carolann,

Attached to this email you can find the SN and some pictures of the unit that felt from the truck at Westborough.

Please, let us know if we can send the unit to one of your locations to assess the damage and determine if the unit is still operational.

Thanks.

**Daniel Cardona**

[Quoted text hidden]

---

**3 attachments**

**IMG_0067.jpg**
615K

**IMG_20260109_121651 (3).heic**
1841K

**IMG_20260109_121651 (4).heic**
3343K

HVACDIRECT.COM

SIZING GUIDE SIGN IN

1-888-634-1870 Today's Hours 8am - 11pm est

SHOPPING CART

Cooling Heating Ductless Mini Split Commercial Air Quality & Filters Fans & Ventilation Fireplaces & Outdoor Water & Plumbing Electrical & Solar Parts & Tools

Home > Commercial & Industrial HVAC Units > Commercial Rooftop & Packaged Units > Trane 12.5 Ton 14 IEER Commercial Packaged Heat Pump - Precedent Series - 208/230V 3 Phase - R454B

# Trane 12.5 Ton 14 IEER Commercial Packaged Heat Pump - Precedent Series - 208/230V 3 Phase - R454B

By Trane Model WSK150A2S ID 206111

Ships in 7-10 Business Days

**$22,442.00**

**Add to Cart for Lower Price**

As low as $724.04/mo*

Tonnage: 5 Ton | 7.5 Ton | 10 Ton | 12.5 Ton | 15 Ton | 20 Ton | 25 Ton

Unit Type: A/C | Gas Pack | Heat Pump

Voltage / Phase: 208/230v 3 Phase | 460v 3 Phase

## Product Features

- Direct Drive Type
- 208/230V 3 Phase Power
- Single Stage Condenser
- Certified for use with R454B refrigerant

Curb Adapter

Custom Roof Curb Adapter + $1,075.00

Electric Heat Kit

-- Please Select --

QTY 1

ADD TO CART

Description | Product Specifications | Reviews | Questions and Answers

The Trane Commercial Packaged Heat Pump Unit - Precedent Series is a versatile and energy-efficient HVAC solution designed for light commercial applications. This all-in-

Trane 5 kW 17,100 BTU Electric Heat Kit for Packaged Units QTY 1

HVACDIRECT.COM

SIZING GUIDE SIGN IN

1-888-634-1870 Today's Hours 8am - 11pm est

SHOPPING CART

Cooling Heating Ductless Mini Split Commercial Air Quality & Filters Fans & Ventilation Fireplaces & Outdoor Water & Plumbing Electrical & Solar Parts & Tools

Home > Commercial & Industrial HVAC Units > Commercial Rooftop & Packaged Units > Trane 12.5 Ton 14 IEER Commercial Packaged Heat Pump - Precedent Series - 460V 3 Phase - R454B

# Trane 12.5 Ton 14 IEER Commercial Packaged Heat Pump - Precedent Series - 460V 3 Phase - R454B

By Trane Model WSK150A4S ID 206112

Ships in 7-10 Business Days

**$22,778.00**

**Add to Cart for Lower Price**

As low as $734.88/mo*

Tonnage: 5 Ton | 7.5 Ton | 10 Ton | 12.5 Ton | 15 Ton | 20 Ton | 25 Ton

Unit Type: A/C | Gas Pack | Heat Pump

Voltage / Phase: 208/230v 3 Phase | 460v 3 Phase

## Product Features

- Direct Drive Type
- 460V 3 Phase Power
- Single Stage Condenser
- Certified for use with R454B refrigerant

Curb Adapter

Custom Roof Curb Adapter + $1,075.00

Electric Heat Kit

-- Please Select --

QTY 1

ADD TO CART

Description | Product Specifications | Reviews | Questions and Answers

29,333 Ratings

The Commercial Packaged Heat Pump Unit - Precedent Series is a versatile and energy-efficient HVAC solution designed for light commercial applications. This all-in-one system provides both reliable heating and efficient cooling from a single, self-contained outdoor unit, making it an ideal choice for businesses seeking year-round comfort.

Trane 5 kW 17,100 BTU Electric Heat Kit for Packaged Units QTY 1

VIEW ITEM

$242.00